	Mark(Color)		Model	Destination	Parts Number
1	■	Red	KFC-1352RG2	EH	H51-2602
2	●	Light-blue	KFC-1353RG2	EH	H51-2603
3	▲	Green	-	-	-
4	□	Amber	-	-	-
5	○	Purple	-	-	-
6	△	Brown	-	-	-
7	▣	Yellow	-	-	-
8	◉	Light-green	-	-	-
9	◬	Pink	-	-	-

C M Y K M100% Y100%

部品番号 PART NO.	使用機種名 USE FOR		
H51-2602-28	KFC-1352RG2 EH		
版下名 ART-WORK NAME 個装箱用版下 (Rel. 2)	承認 APPRPVED '13.11.21	検図 CHECKED '13.11.21	担当 CHARGE '13.11.21
尺度 SCALE 1/1 DESIGNED BY 吉 野			
JVC KENWOOD Corporation			

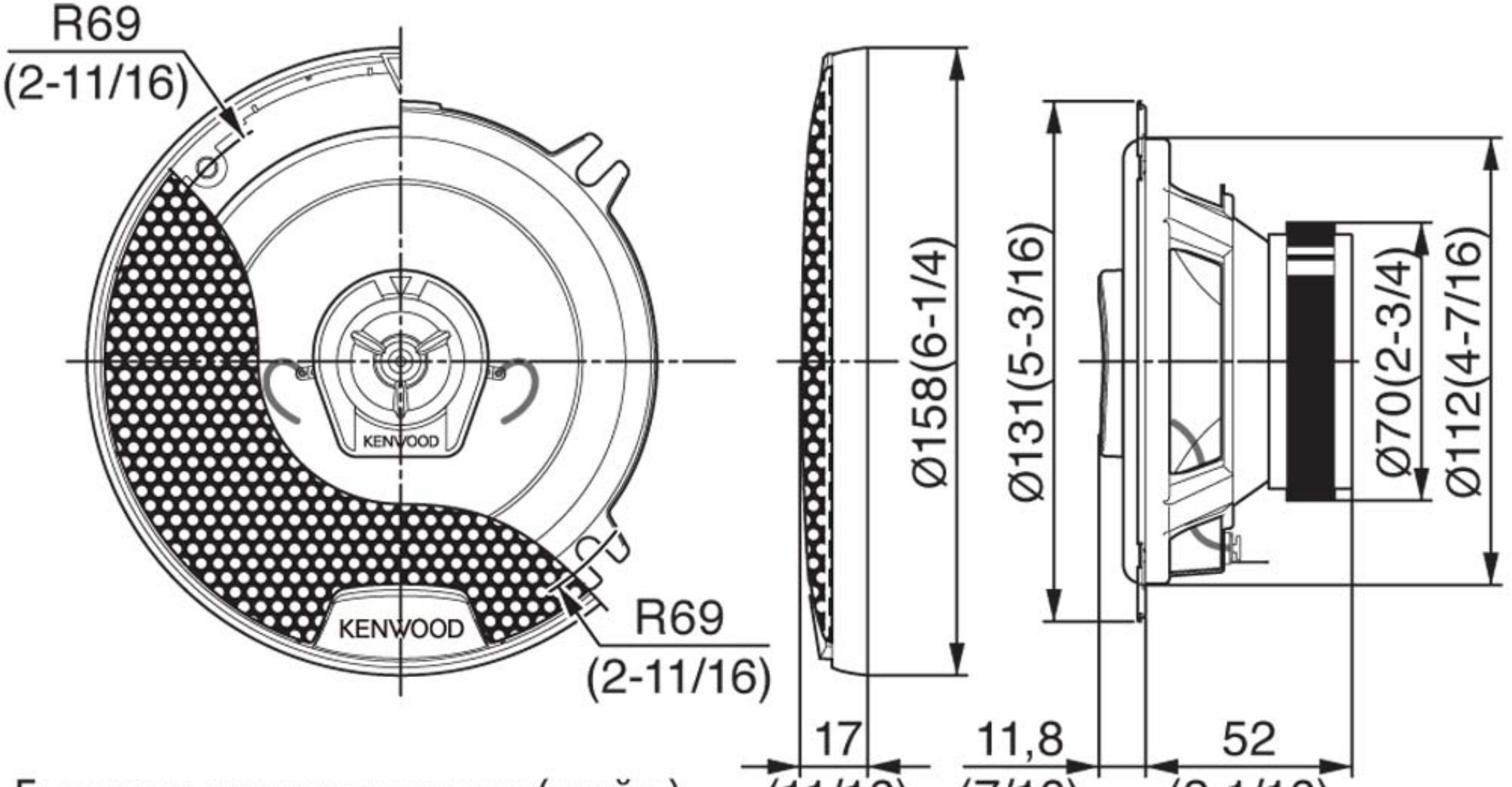

Единица измерения: мм (дюйм)

Unit:mm(inch)