Dimension: 70 x 140 mm

OUTSIDE

• **Do not place any metallic objects onto the wireless charger.**

• Ne placez aucun objet métallique sur le chargeur sans fil.

• No coloque ningún objeto metálico sobre el cargador inalámbrico.

• Stellen Sie keine metallischen Gegenstände auf das kabellose Ladegerät.

• Non posizionare oggetti metallici sul caricabatterie wireless.

• Kablosuz şarj cihazının üzerine herhangi bir metal nesne koymayın.

• Não coloque objetos metálicos sobre o carregador sem fio.

• Не кладите металлические предметы на беспроводное зарядное устройство.

• ワイヤレス充電器の上に金属物を置かないでください。

• 무선 충전기 위에 금속 물체를 올려 놓지 마십시오.

• 請勿在無線充電器上放置任何金屬物體。

• 请勿在无线充电器上放置任何金属物体。

NEED HELP?

BESOIN D'AIDE? I ¿NECESITAS AYUDA? I BRAUCHEN SIE HILFE? I HAI BISOGNO DI AIUTO? I YARDIMA MI IHTIYACINIZ VAR? I PRECISO DE AJUDA? I НУЖНА ПОМОЩЬ? I 助けが必要？ I 도움이 필요하다? I 需要幫忙？ I 需要帮忙?

+1 858 268 1800 support@satechi.com

CHARGING YOUR DEVICES

CHARGER VOS APPAREILS I CARGA TUS DISPOSITIVOS I LADEN SIE IHRE GERÄTE AUFI ACCENDE/ CARICA I TUOI DISPOSITIVI I CIHAZLARINIZI ŞARJ ETME I CARREGANDO SEUS DISPOSITIVOS I ЗАРЯДКА ВАШИХ УСТРОЙСТВ I デバイスの充電 I 장치 충전 I 為您的設備充電 I 为您的设备充电

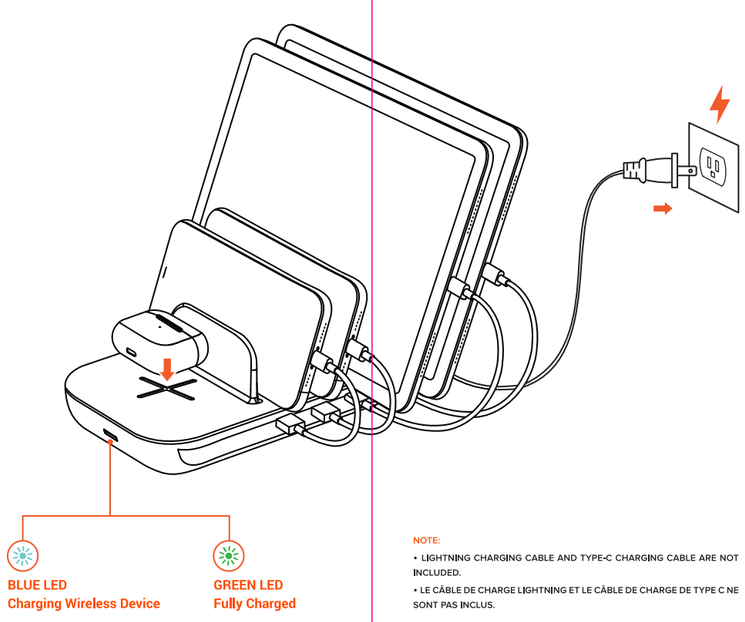

NOTE:

• LIGHTNING CHARGING CABLE AND TYPE-C CHARGING CABLE ARE NOT INCLUDED.

• LE CÂBLE DE CHARGE LIGHTNING ET LE CÂBLE DE CHARGE DE TYPE C NE SONT PAS INCLUS.

FCC

This device complies with part 15 of the FCC results.
Operation is subject to the following two conditions:

1. This device may not cause harmful interference and
2. This device must accept any interference received, including interference that may cause undesired operation.

Note: This Equipment has been tested and found to comply with the limits for a class B digital device, pursuant to Part 15 of the Federal Communications Commission (FCC) rules. These limits are designed to provide reasonable protection against harmful interference in a residential installation. This equipment generates, uses, and can radiate radio frequency energy and, if not installed and used in accordance with the instructions, may cause harmful interference to radio communications. However, there is no guarantee that interference will not occur in a particular installation. If this equipment does cause harmful interference to radio or television reception, which can be determined by turning the equipment off and on, the user is encouraged to try to correct the interference by one or more of the following measures:

1.1. Reorient or relocate the receiving antenna
1.2. Increase the separation between the equipment and receiver
1.3. Connect the equipment into and outlet on a circuit different from that to which the receiver is connected
1.4. Consult the dealer or an experienced radio/TV technician for help

Changes or modifications not expressly approved by the manufacturer could void the user's authority operate the equipment.

CE DECLARATION OF CONFORMITY

Satechi declares that this product is in compliance with the essential requirements and other relevant provisions of applicable EC directives. For Europe, a copy of the Declaration of Conformity for this product may be obtained by visiting **www.satechi.net/doc**

WEEE Information

According to the WEEE (Waste Electrical and Electronic Equipment) Directive, do not dispose of this product as household waste or commercial waste. Waste electrical and electronic equipment should be appropriately collected and recycled as required by practices established for your country. For information on recycling of this product, please contact your local authorities, your household waste disposal service, or the shop where you purchased the product.

Инструкции по безопасности

Импортер: ООО «Дихаус». Адрес: Россия, 105066, Москва, ул. Доброслободская, д. 5, стр. 1, комната 10. Претензии принимаются по адресу: Россия, 111250, г. Москва, пр-д завода «Серп и Молот», д.6, к.1.

Страна-изготовитель: Китай. Фирма изготовитель: Сарьяна ЛЛС 7365 Миссион Джордж Роуд Сюит #Джи, г. Сан Диего, Калифорния 92120 США.

Срок службы 1 год. Срок гарантии 1 год с момента продажи. Условия гарантии: соблюдение условий использования. Условия использования: при температуре от +10°С до +35°С,беречь от влаги и механических воздействий, не располагать легковоспламеняющиеся предметы в непосредственной близости с устройством. После использования утилизировать.

Дата изготовления и информация о соответствии требованиям ТР ТС указаны на розничной упаковке изделия.

SATECHI

DOCK5 MULTI-DEVICE CHARGING STATION W/ WIRELESS CHARGER

Manuel d'utilisateur I Manual de usuario I Bedienungsanleitung I Manuale dell'utente I Kullanım kılavuzu I Manual do usuário I Руководство пользователя I ユーザーマニュアル I 사용 설명서 I 用戶手冊 I 用户手册

INSIDE

FUNCTIONS

FONCTIONS I FUNCIONES I FUNKTIONEN I FUNZIONI I FONKSİYONLAR I FUNÇÕES I ФУНКЦИИ I 機能 I 기능 I 功能 I 功能

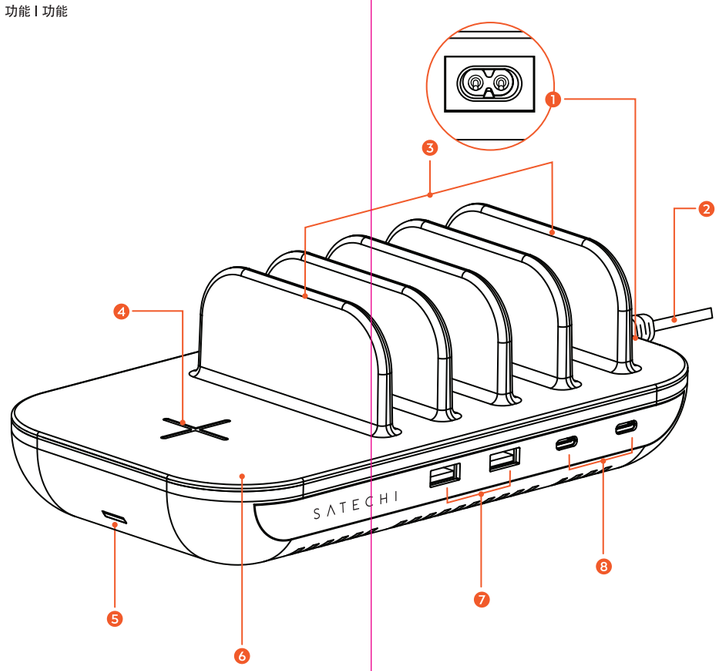

1. 2-Pin Power Connector

Connecteur d'alimentation à 2 broches I Conector de energía de 2 pines I 2-poliger Stromanschluss I Connettore di Alimentazione a 2-Pin I 2 Pimli Güç Konektörü I Conector de alimentação de 2 pinos I 2-контактный разъем питания I 2ピン電源コネクター I 2핀 전원 커넥터 I 2針電源連接器 I 2针电源连接器

2. Power Cable (included)

Câble d'alimentation (inclus) I Cable de carga (incluido) I Netzkabel (im Lieferumfang enthalten) I Cavo di ricarica (incluso) I Güç Kablosu (dahil) I Cabo de alimentação (incluído) I Кабель питания (в комплекте) I 電源ケーブル（付属）I 전원 케이블 (포함) I 電源線 (附帶）I 电源线（附带）

3. Soft Silicone Dividers

Diviseurs en silicone souple I Divisores de silicona blanda I Weiche Silikonteiler I Divisori in silicone morbido I Yumuşak Silikon Bölücüler I Divisores de silicone macio I Мягкие силиконовые разделители I ソフトシリコーンディバイダー I 부드러운 실리콘 분배기 I 軟矽膠分隔物 I 软硅胶分隔物

4. Qi Charger (Max. 10W)

Chargeur Qi (Max 10W) I Cargador Qi (Max 10W) I Qi-Ladegerät (Max. 10W) I Caricabatterie Qi (max 10W) I Qi Şarj Cihazı (Maks. 10W) I Carregador Qi (máx. 10 W) I Зарядное устройство Qi (макс. 10 Вт) I Qiチャージャー（最大10W）I Qi충전기 (최대 10W) I Qi充電器（最大10W） I Qi充电器（最大10W）

5. Wireless Charging Indicator

Indicateur de Charge sans Fil I Indicador de carga inalámbrica I Drahtlose Ladeanzeige I Indicatore di carica wireless I Kablosuz Şarj Göstergesi I Indicador de carga sem fio I Индикатор беспроводной зарядки I ワイヤレス充電インジケーター I 무선 충전 표시기 I 無線充電指示燈 I 无线充电指示灯

6. Non-Slip Silicone Padding

Rembourrage en Silicone Antidérapant I Almohadilla de Silicona Antideslizante I Rutschfeste Silikonpolsterung I Tampone in Silicone Antiscivolo I Kaymaz Silikon Ped I Acolchoamento de silicone antiderrapante I Нескользящее силиконовое покрытие I 滑り止めシリコンパッド I 미끄럼 방지 실리콘 패딩 I 防滑矽膠墊 I 防滑硅胶垫

7. USB-A Output (Max.12W Each)

Sortie USB-A (12 W maximum chacun) I Salida USB-A (máximo 12 W cada uno) I USB-A-Ausgang (jeweils max. 12 W) I Uscita USB-A (massimo 12 W ciascuna) I USB-A Güç çıkışı(Her biri Maks.12W) I Saída USB-A (máx. 12W cada) I Выход USB-A (макс. 12 Вт каждый) I USB-A出力（各最大12W）I USB-A 출력 (각각 최대 12W) I USB-A輸出（每個最大12W）I USB-A输出（每个最大12W）

8. USB-C Output (PD 20W Each)

Sortie USB-C (PD 20 W chacun) I Salida USB-C (PD 20W cada uno) I USB-C-Ausgang (jeweils PD 20W) I Uscita USB-C (PD 20W ciascuno) I USB-C Güç çıkışı (Her biri PD 20W) I Saída USB-C (PD 20W cada) I Выход USB-C (PD 20 Вт каждый) I USB-C出力（PD 20W各）I USB-C 출력 (각 PD 20W) I USB-C輸出（每個PD 20W） I USB-C输出（每个PD 20W）

IMPORTANT

IMPORTANT I IMPORTANTE I WICHTIG I IMPORTANTE I ÖNEMLI I IMPORTANTE I ВАЖНО I 重要 I 중대한 I 重要事項 I 注意

• **Keep your charging station away from moisture and corrosive materials.**

• Gardez votre station de charge à l'abri de l'humidité et matériaux corrosifs.

• Mantenga la estación de carga lejos de la humedad y los materiales corrosivos.

• Halten Sie Ihre Ladestation von Feuchtigkeit fern und ätzende Materialien.

• Tenere la stazione di ricarica lontana da umidità e materiali corrosivi.

• Şarj istasyonunuzu nemden uzak tutun ve aşındırıcı malzemeler.

• Mantenha sua estação de carregamento longe de umidade e materiais corrosivos.

• Храните ваше зарядное устройство вдали от влаги и агрессивных материалов.

• 充電ステーションを湿気から遠ざけてくださいおよび腐食性物質。

• 충전 스테이션을 습기로부터 멀리하십시오및 부식성 물질.

• 保持充電器乾燥並遠離濕氣和腐蝕性材料。

• 保持充电器干燥并远离湿气和腐蚀性材料。